PXF LIGHTING

**INSTALLATION MANUAL**

**PXF Lighting sp. z o.o**
**73 Jutrzenki Street**
**02-230 Warsaw**
tel.: +48 22 33 44 000
fax: +48 22 33 44 033
www.pxf.pl

IP20

# POKER TS LED

## ADAPTER POINT 1X/2X

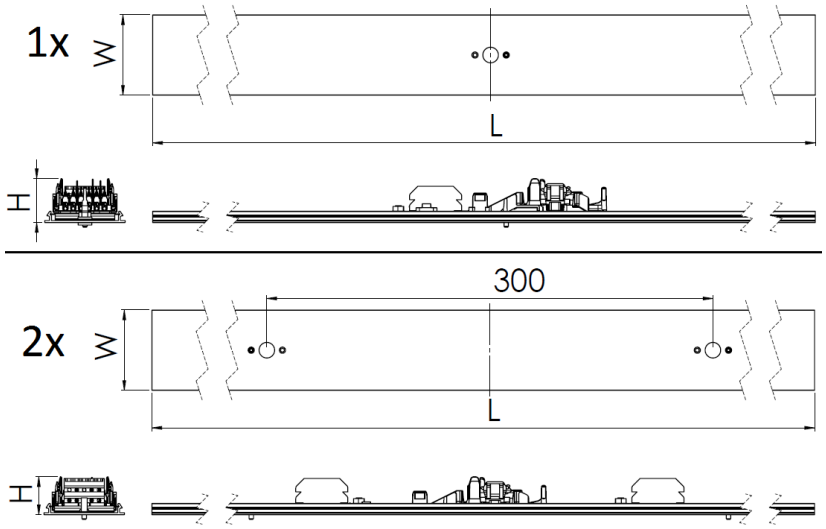


**220-240V / 50-60Hz**

| TYP | H [mm] | W [mm] | L [mm] | Waga [kg] |
|---|---|---|---|---|
| 1130 1x | 31 | 54 | 1130 | 0,5 |
| 1130 2x | 31 | 54 | 1130 | 0,5 |

***Dopuszczalne obciążenie adaptera: 3kg. / Max. load: 3kg**
***Projektory LED zamawiane oddzielnie. / *LED projectors ordered separately.**

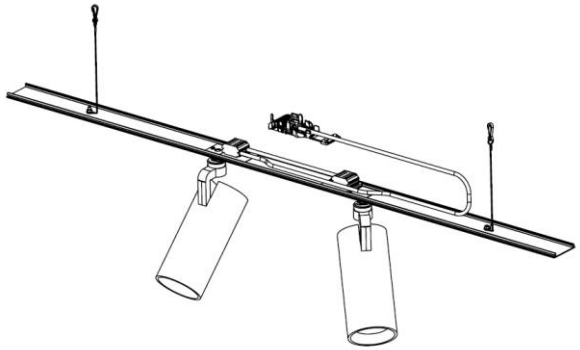

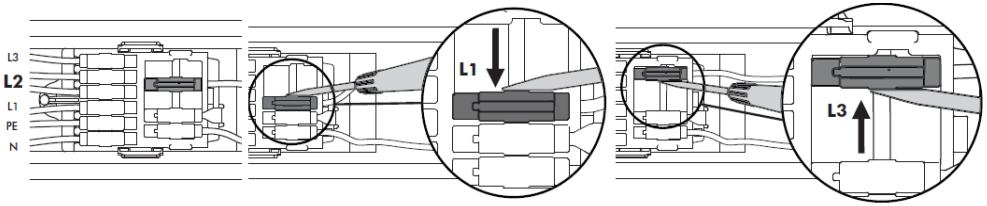


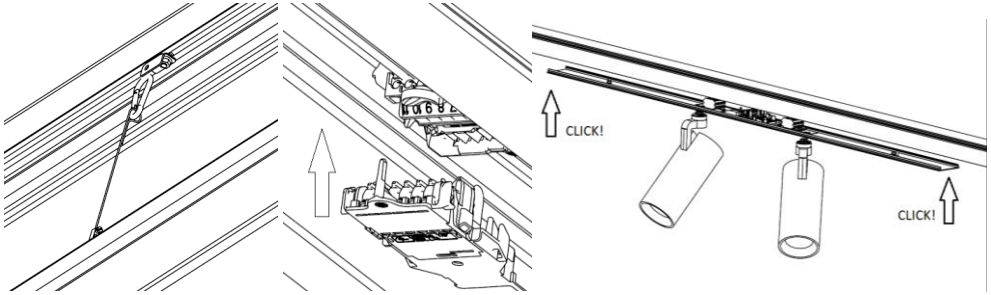


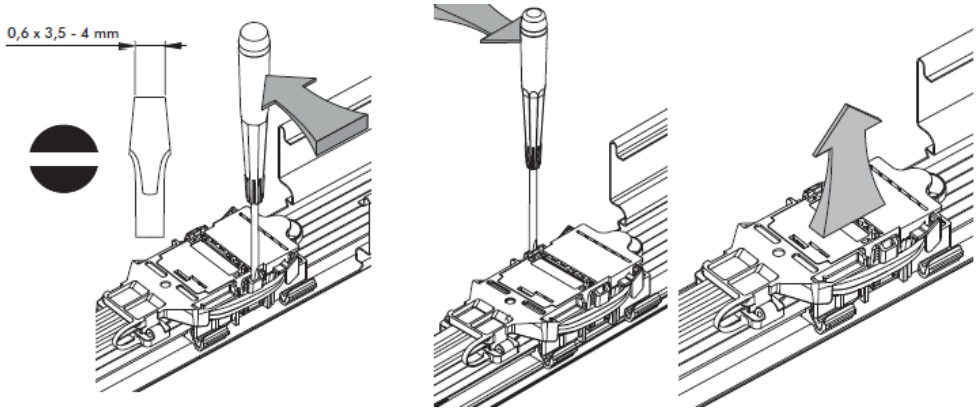


**Important warnings:**
The luminaries may be installed by qualified registered personnel only.
Any manipulation inside the luminaire when the power is activated causes the risk of electric shock.
The manufacturer is not responsible for any flaws resulting from non-compliance with these instructions.
The manufacturer reserves the right to change the construction of the product.
Do not install the luminaire in places without sufficient air circulation.
To guarantee safe luminaire functioning, please follow the instructions in the installation instructions.
PXF Lighting website: www.pxf.pl

Warning
Risk of electric shock!

The European Directive 2002/96/EC on waste electrical and electronic equipment, requires that electric and electronic devices must be disposed of in the normal household waste. The crossed out wheeled bin is reproduced in order to remind obligations towards separate collection. For correct disposal, please use authorized waste disposal facilities or return to the distributor at the date a new lighting fitting is purchased. Lamps, if disposed together with the lighting fitting, shall not be broken up since they contain substances which are highly polluting to the environment. Unauthorized disposal of the foregoing waste material is punishable by law.