PXF LIGHTING

INSTALLATION MANUAL

PXF Lighting sp. z o.o
73 Jutrzenki Street
02-230 Warsaw
tel.: +48 22 33 44 000
fax: +48 22 33 44 033
www.pxf.pl

IP54 IP20

POKER TS LED

UNIVERSAL ADAPTER

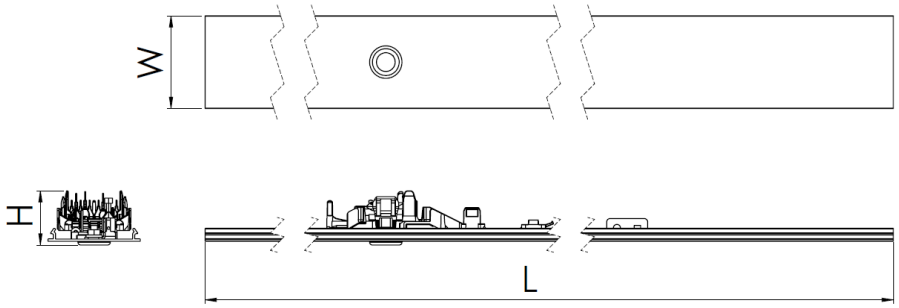

220-240V / 50-60Hz

TYP	H [mm]	W [mm]	L [mm]	Waga [kg]
1130	31	54	1130	0,5

***Dopuszczalne obciążenie adaptera: 3kg. / Max. load: 3kg**
***Osprzęt nie wchodzi w skład zestawu. / *Equipment not included**

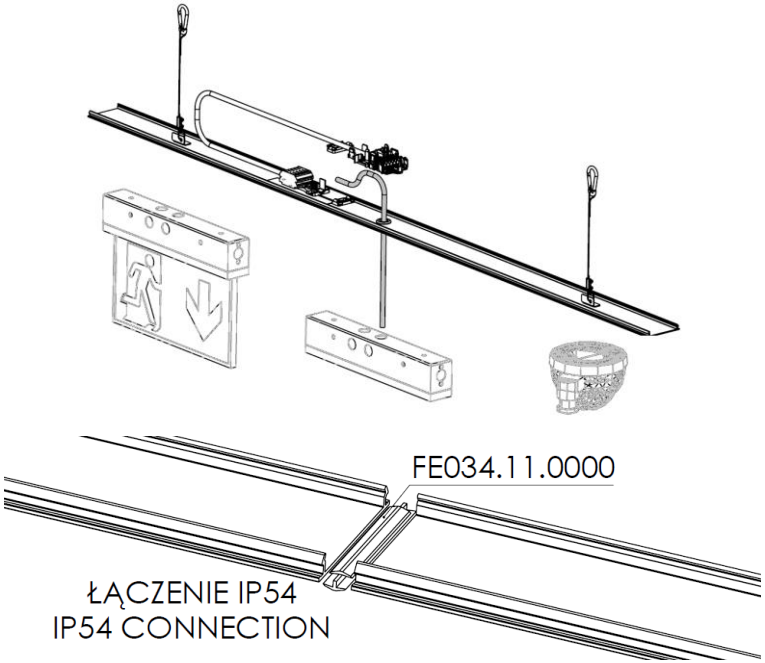

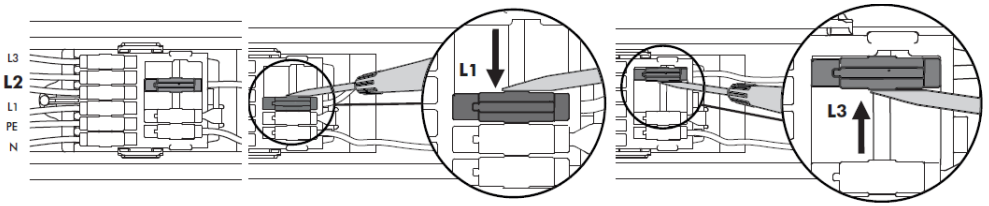

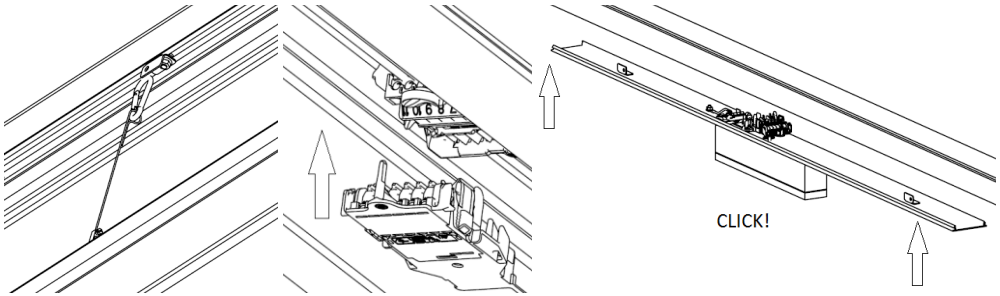

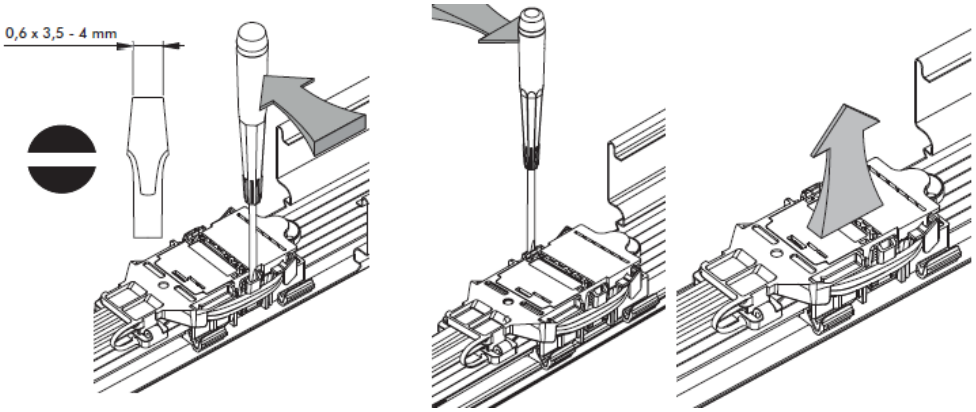

Important warnings:
The luminaries may be installed by qualified registered personnel only.
Any manipulation inside the luminaire when the power is activated causes the risk of electric shock.
The manufacturer is not responsible for any flaws resulting from non-compliance with these instructions.
The manufacturer reserves the right to change the construction of the product.
Do not install the luminaire in places without sufficient air circulation.
To guarantee safe luminaire functioning, please follow the instructions in the installation instructions.
PXF Lighting website: www.pxf.pl

Warning
Risk of electric shock!

The European Directive 2002/96/EC on waste electrical and electronic equipment, requires that electric and electronic devices must be disposed of in the normal household waste. The crossed out wheeled bin is reproduced in order to remind obligations towards separate collection. For correct disposal, please use authorized waste disposal facilities or return to the distributor at the date a new lighting fitting is purchased. Lamps, if disposed together with the lighting fitting, shall not be broken up since they contain substances which are highly polluting to the environment. Unauthorized disposal of the foregoing waste material is punishable by law.